ARRA INC.
ANTENNA & RADOME RESEARCH ASSOCIATES
Tel 516-231-8400 Fax 516-434-1116

CONTINUOUSLY VARIABLE ATTENUATORS

DC-500 MHz Miniature Models

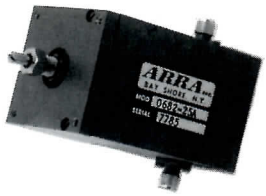

Form 4449

Form 4450

Form 4450-SS

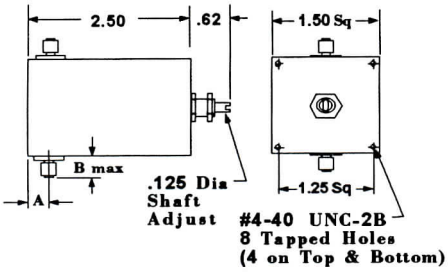

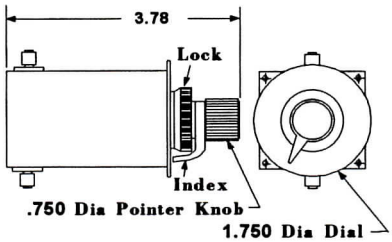

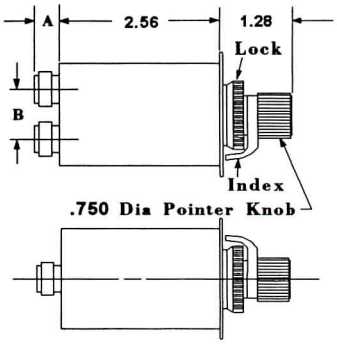

Dimensions - Inches
Standard Forms 4449 & 4450

Connector	A	B
SMA Female	.38	.38
N Female	.40	.50
TNC Female	.38	.75
BNC Female	.38	.75

Space Saver Option ****
Forms 4449-SS & 4450-SS

Connector	A	B
SMA Female	.38	.80
N Female	.50	.88
TNC Female	.75	.80
BNC Female	.75	.80

GENERAL SPECIFICATIONS

Frequency Range . . . . . DC-500 MHz
RF Power . . . . . 1 Watt average
Nominal Impedance . . . . 50 Ohms *
Temperature Range . . . . . -55°C to +85°C
Connectors . . . . . SMA Female standard **
Material . . . . . Body - Aluminum
Connectors - MIL-C-39012
Finish . . . . . ARRA Blue per MIL-C-22750

DIRECTLY CALIBRATED MODELS

Freq Range (MHz)	Atten Range (dB)	Atten vs Freq (±dB)	VSWR (Max)	Ins Loss (Max dB)	Form Factor	Model No.
DC - 60	40	1.00	1.5	0.5	4450	0682-40F
DC - 100	30	0.50	1.5	0.5	4450	0682-30F
DC - 500 ***	10	0.25	1.5	1.5	4450	0682-10G ***

UNCALIBRATED MODELS

Freq Range (MHz)	Atten Range (dB)	Atten vs Freq (±dB)	VSWR (Max)	Ins Loss (Max dB)	Form Factor	Model No.
DC - 60	40	1.00	1.5	0.5	4449	0682-40
DC - 100	30	0.50	1.5	0.5	4449	0682-30
DC - 200	25	2.00	1.5	1.0	4449	0682-25A
DC - 500 ***	10	0.25	1.5	1.5	4449	0682-10 ***

* For 75 Ohms impedance, suffix model number with -75. Ex: BNC0682-30F-75
** Type N, BNC & TNC available. Precede model number with type desired. Ex: BNC0682-30F
*** DC to 500 MHz with SMA connectors; DC to 300 MHz with BNC, Type N or TNC connectors; not available in 75 Ohms.
**** For space saver option, base model number changes to 0684. (Not available on DC-500 models)